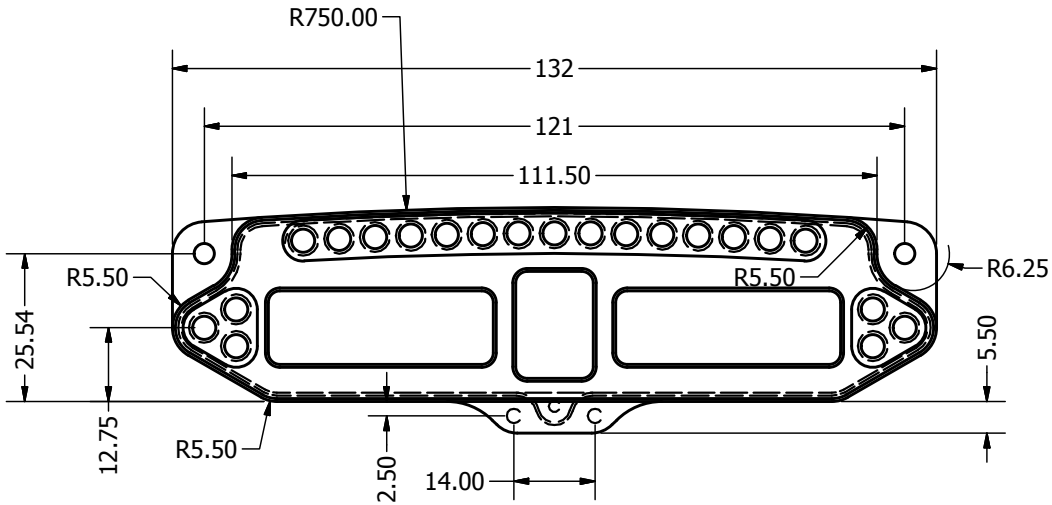
R750.00
132
121
111.50
R5.50
R5.50
R6.25
25.54
12.75
R5.50
2.50
14.00
5.50

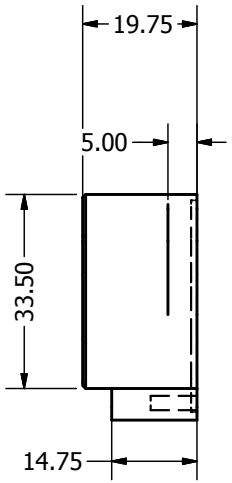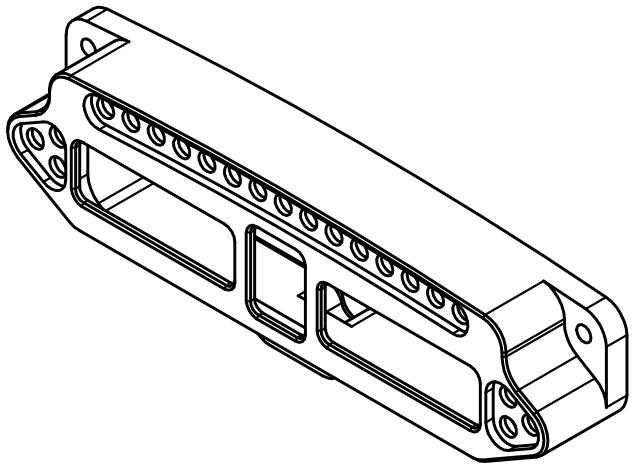
19.75
5.00
33.50
14.75